Aviation Accident CAST analysis
STAMP Workshop 2025

Disclaimer

This exercise is **not** meant to represent a complete analysis. It is not meant to exhaustively demonstrate CAST. This is **not** a training course. This simple exercise is only meant to quickly introduce some core concepts on a real-world example.

This accident scenario is based on a public report from the Brazilian Aeronautical Accident Investigation and Prevention Center (CENIPA). The full accident report can be found at:
https://reports.aviation-safety.net/2007/20070717-0_A320_PR-MBK.pdf.

All the information provided in the slides and the accompanying workbook comes from the accident report produced CENIPA linked above, and the Airbus A320 Flight Crew Operations Manual (FCOM) and Flight Crew Training Manual (FCTM).

Factual Information About the Accident

Date/Time of Accident: 17 July 2007 – 18:54 local time
Location of Accident: São Paulo/Congonhas–Deputado Freitas Nobre Airport (CGH), São Paulo, Brazil
Aircraft Model: Airbus A320-233 with registration PR-MBK
Aircraft Operator: TAM Linhas Aéreas S/A

Outcome: Total destruction of the aircraft and the death of its 187 occupants, along with 12 people on the ground

Summary: On 17 July 2007, at 18:54 local time, TAM Linhas Aéreas flight JJ3054, an Airbus A320, did not sufficiently decelerate upon landing at Congonhas (CGH) airport in São Paulo, Brazil, and overran the runway, crashing into a warehouse and claiming the lives of 199 people. The flight had departed Porto Alegre (POA) at 17:19 local time and was uneventful until its landing on runway 35L, which the pilots had been informed by air traffic control was wet and slippery due to heavy rain. The aircraft was operating with the number 2 engine thrust reverser deactivated, which was in accordance with the aircraft's Master Minimum Equipment List (MMEL). During the landing roll, no physical components of the aircraft failed, but the ground spoilers and autobrake did not deploy. The aircraft did not sufficiently decelerate, began veering to the left, and ultimately overran the runway at its left edge. The aircraft shot over a busy avenue and collided with a TAM Express warehouse and gas station, killing all 187 people on board, as well as a further 12 on the ground.

Timeline of Events Leading up to Loss:

ID	Event
1	On 16 January 2007, Airbus published new procedure (see page 7) for landing an A320 with an inoperative thrust reverser and released standard H2F3 which implements an alerting system to inform pilots about an inappropriate setting of the thrust levers for landing
2	TAM updated Master Equipment List (MEL) to reflect change in operational procedure for landing with an inoperative thrust reverser
3	In early 2007, Congonhas runways underwent restoration to remove irregularities, but operations resumed on 29 June 2007 before grooving was completed
4	On 13 July 2007, number 2 engine thrust reverser on PR-MBK was deactivated by maintenance due to leakage in inner actuator and PR-MBK was released for operation according to MMEL
5	Since 15 July 2007, abundant rain was observed at Congonhas airport
6	PR-MBK landed 28 times (including the accident flight) after deactivation of the number 2 thrust reverser, including two landings in Congonhas on the day of the accident. In these 28 landings, 5 different procedures were used by different crews for landing with the inoperative thrust reverser
7	On 17 July 2007 at 17:19 local time, JJ3054 took off from Porto Alegre, encountered adverse weather on its way to Congonhas and received information from ATC that runway 35L was “wet and slippery”
8	Auto brake was armed and speed brake lever was moved to armed position
9	Moments before landing, at a height of 10ft above the runway, the “RETARD” automatic callout sounded, informing pilots to move thrust levers to “IDLE”
10	Number 1 engine thrust lever was moved to the “IDLE” position, while the number 2 engine thrust lever was left at the “CL” position
11	Main landing gear touched the runway at a speed of approximately 140kts
12	Nose landing gear touched the runway about 2.5 seconds after left main landing gear
13	Number 1 engine thrust lever was moved to the “REV” position, activating the left thrust reverser, while the number 2 engine thrust lever remained at the “CL” position
14	“RETARD” callout ceased
15	Autothrust disconnected and “thrust lock” activated, which froze engines at current thrust setting unless manually changed
16	0.4 seconds after touchdown, second-in-command (SIC) announced “Reverse number one only”
17	Three seconds later, second-in-command (SIC) announced “Spoilers nothing” as ground spoilers did not automatically deploy and autobrake did not activate
18	Six seconds after main gear touchdown, brakes were first activated through the pedals, and reach maximum deflection five seconds later

19	Aircraft began veering left, and differential braking and rudder movement was applied to counteract this
20	Aircraft overran left edge of the runway near the departure threshold, then shot off the rim of the hill the airport is constructed on and over Washington Luís Avenue
21	Aircraft collided with a TAM Express warehouse and gas station across the avenue

Control Structure Sketch

Relevant Aircraft Systems

- **Auto-brake:** The A320 is equipped with an automatic brake system, which assists the pilot in decelerating the aircraft after landing.

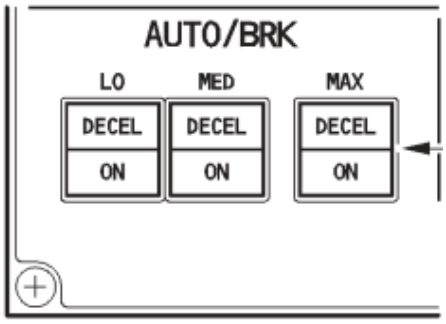

The crew uses the “Auto Brake” panel to arm one of three braking modes available by pressing a pushbutton switch. For whichever button is pressed, a blue “ON” light comes on to indicate that mode has been selected. The modes are:

- MAX – provides maximum pressure to the brakes immediately when the ground spoiler deployment order is generated; used for aborted takeoffs;
- MED – provides progressive pressure to the brakes 2 seconds after ground spoiler deployment, to achieve a desired deceleration rate of 3 m/s^2; used for landing;
- LO – provides progressive pressure to the brakes 4 seconds after ground spoiler deployment, to achieve a desired deceleration rate of 1.7 m/s^2; used for landing;

A green “DECEL” light turns on once the aircraft is decelerating at 80% of the desired deceleration rate

- **Ground Spoilers:** The A320 is equipped with five ground spoilers on the upper surface of each wing, which deploy to reduce lift and increase aerodynamic drag, allowing for more efficient braking and reducing aircraft landing distance. They are controlled by a Spoiler Elevator Computer (SEC).

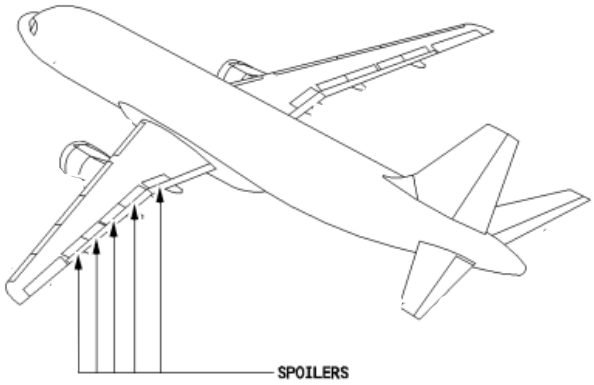

Deployment of the ground spoilers is dependent on the following 3 conditions:

- The spoilers are armed by pulling the speed brake lever up into the "ARMED" position
- The aircraft is on the ground, determined by a wheel speed over 72kt or weight on wheels detected on both main landing gears
- All thrust levers at or near idle, OR reverse is selected on at least one engine, with the other lever at or near idle

Deployment of the ground spoilers is indicated in the F/CTL page of the Electronic Centralized Aircraft Monitor (ECAM), as such:

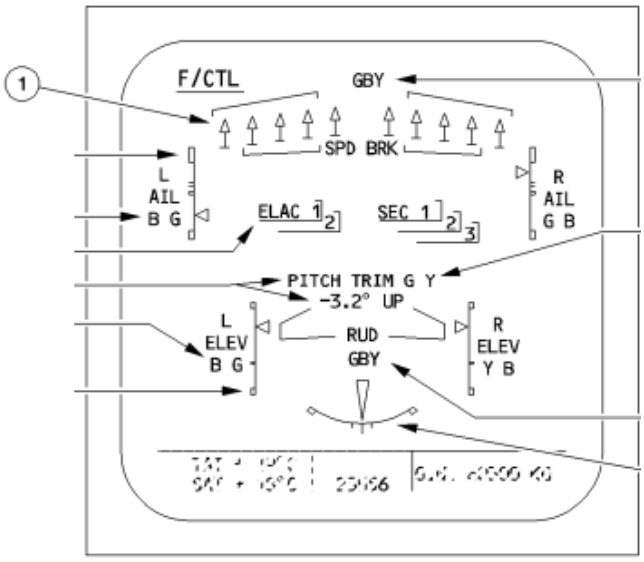

The icons on the display labeled ① will appear as green arrows (⇧) if the corresponding spoiler has deflected by more than 2.5° and will appear as green lines (—) if the corresponding spoiler is retracted.

- **Thrust Control:** A Full Authority Digital Engine Control (FADEC) computer controls the thrust in each engine of the A320. The pilot positions the thrust lever, and the FADEC reads this position as a thrust lever angle (TLA), which it uses to determine the power limits for each engine. There are 5 positions (detents) for the thrust levers: “TOGA” (Takeoff/Go-around), “FLX/MCT” (Flex Takeoff/Maximum Continuous Thrust), "CL" (Climb), "IDLE" (Zero Thrust) and "REV" (Reverser).

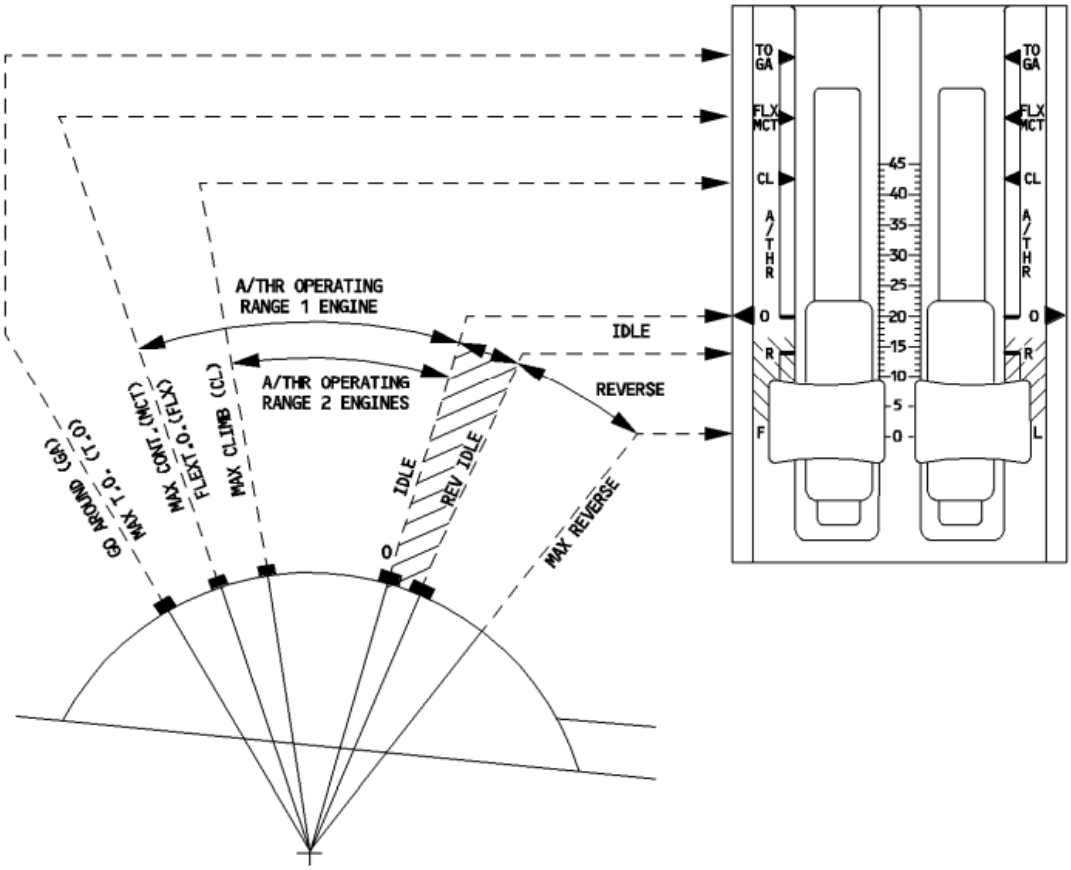

The A320 autothrust system is available from the "IDLE" up to the “FLX/MCT” positions. When autothrust is active, it automatically controls the power to the engines, which varies from "IDLE" up to the limit determined by the lever position, in order to maintain a speed or vertical variation rate previously selected by the pilot. Differently from an auto-*throttle* system, the thrust levers themselves do not move as the system commands changes in thrust.

When thrust levers are set to IDLE, autothrust is set to off. When thrust reduction is required for landing, the flight crew training manual (FCTM) recommends that the levers be moved smoothly and set to the IDLE stop, which will retard thrust, and set autothrust to off. A “RETARD” aural alert sounds at 20 feet to remind the crew to move the thrust levers to “IDLE”. If the autothrust disconnects (either through pilot action or through a failure) with the thrust levers at the CL detent, the thrust lock (“THR LK”) function activates, which freezes the engine thrust at its level prior to the disconnect. Manually moving the thrust levers gives back manual control of engine thrust to the pilots.

- **Thrust Reversers:** The Airbus A320 is equipped with thrust reversers on both engines, which deflect the airstream from the engine fan to aid in deceleration. The thrust reverser system is considered an additional decelerating system by its manufacturer and is not required for certification. In-flight activation of thrust reversers can be catastrophic, so three conditions exist for activation of an engine's thrust reverser:
    - The aircraft is on the ground, determined by weight on wheels detected on both main landing gears
    - The FADEC channel for the engine is operational
    - A thrust lever angle signal of "reverse" is detected and validated by a Spoiler Elevator Computer

  Two procedures existed for landing with one thrust reverser inoperative:
    - **Procedure 1 (old procedure):** During the flare at 10ft AGL, the pilot reduces both thrust levers to "IDLE". After touching down, the pilot moves only the available reverser's lever to "REV", leaving the other at "IDLE".
    - **Procedure 2 (new procedure):** During the flare at 10ft AGL, the pilot reduces both thrust levers to "IDLE". After touching down, the pilot moves both levers to "REV".

  The old procedure is more efficient from a braking perspective, but was found to induce crews to commit errors in placement of thrust levers. The new procedure is simpler but adds 55m to the landing calculations for contaminated runways, as immediately after the activation of the thrust reversers, engine power increases to increase the flow of air being reversed, before a software check inhibits this increase for the engine whose reverser is inoperative.